RISH CON - M

PROGRAMMABLE MULTI-TRANSDUCER

Application :

The **RISH** CON **-** M transducer is used to measure and convert parameter of Three-phase 3W/4W AC power network with balanced or unbalanced system.

It ensures that the measurement and conversion of measured values into standard analog current signals.Relay outputs signal the overflow of the selected quantitis,and the pulse output can be used for the consumption monitoring of the 3-phase active energy.

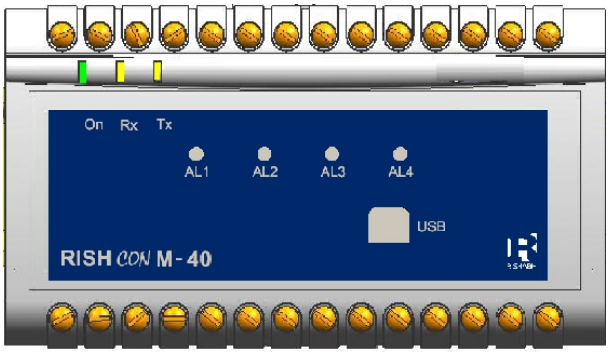

Fig. 1 RISH CON - M

Salient Features :

- True RMS measurement.
- Fully **onsite programmable** input PT & CT ratio.
- Detection and signaling of incorrect phase sequence.
- THD Measurement.
- Programmable parameters through the **RS-485** interface or USB when using the free **eCon** configuration software
- **Onsite selectable analog output range (0...20mA/4...20mA/-20...+20mA).**
- Fast and easy installation on DIN RAIL or onto a wall or in a panel using optional screw hole bracket.
- Connection Terminal : Conventional Screw type.

Product Features:

Measuring Input:
AC Voltage/Current input signal,sine wave or distorted wave form.

Analog Output :
Analog output which can be set in between -20mA....20mA onsite. Admissible overflow on analog output: 20% of lower and upper value.

Programmable PT,CT Ratio:
The Transducer can be programmed onsite using through RS 485 or USB port..

LED Indication:
LED indication for power on,RS485 transmission, reception and alarm switching .

RS485 Communication:
RS485 communication is available. For reading measured parameter & onsite configuration of input/output.

USB Communication:
RS485 communication is available. For reading measured parameter & onsite configuration of input/output.

Energy Measurement:
Tetraquadrantic energy measurement (Ep+, Ep-, EqL, Eqc).

Mean Active Power :
Measurement of 15, 30 or 60 minutes' mean active power (synchronization by an internal clock or a walking window) with the archiving function of 1000 last samples.

Galvanic Isolation:
Transducer output signal are galvanically isolated from the input signal.

Pulse constant of OC type output:
5000-20000imp./KWh, independently on setting of ratios Ku,Ki

Alarm Indications:
The alarm indication can be set for measured input parameter.

RISHABH INSTRUMENTS PVT.LTD.
F-31, MIDC, Satpur, Nashik-422 007,India.
Tel.: +91 253 2202160, 2202202 Fax : +91 253 2351064
E-mail : India :- marketing@rishabh.co.in
International :- exp.marketing@rishabh.co.in
www.rishabh.co.in

Subject to change without Notice

Technical Specifications:

Measuring Ranges and Admissible Basic Errors

Table 1

Measured quantity		Measuring range	L1	L2	L3	Σ	Basic error
Current 1/5A L1...L3		0.02...6 A~	●	●	●		±0.2%
Voltage L-N	57.7V~ 230.0V~	2.9...69.24 V~ 11.5...276 V~	●	●	●		±0.2%
Voltage L-L	100.0V~ 400.0V~	5.0... 120 V~ 20.. . 480 V~	●	●	●		±0.5%
Frequency		47.0...63.0 Hz	●	●	●		±0.2%
Active power		-1.65 kW...1.4 W...1.65 kW	●	●	●	●	±0.5%
Reactive power		-1.65 kv ar...1.4 var...1.65 kvar	●	●	●	●	±0.5%
Apparent power		1.4 VA...1.65 kVA	●	●	●	●	±0.5%
PF factor		-1...0...1	●	●	●	●	±0.5%
Tangens φ		-1.2...0...1.2	●	●	●	●	±1%
Cosinus φ		-1...1	●	●	●	●	±1%
Angle between U and I		-180 °... 180 °	●	●	●		±0.5%
Input active energy		0...99 999 999.9 kWh				●	±0.5%
Developed active energy		0...99 999 999.9 kvarh				●	±0.5%
Reactive inductive energy		0...99 999 999.9 kWh				●	±0.5%
Reactive capaciti-ve energy		0...99 999 999.9 kvarh				●	±0.5%
THD in the range 10...120% U,I; 48...52 Hz; 58..62 Hz		0...100%	●	●	●	●	±5%

Caution! For correct current measurement, the presence of voltage with the value higher than 0.05 Un is required at least on one phase

Power Consumption:

- in supply circuit ≤10 VA
- in voltage circuit ≤ 0.05 VA
- in current circuit ≤ 0.1 VA

RISHABH INSTRUMENTS
Measure, Control & Record with a Difference

RISHABH INSTRUMENTS PVT.LTD.
F-31, MIDC, Satpur, Nashik-422 007,India.
Tel.: +91 253 2202160, 2202202 Fax : +91 253 2351064
E-mail : India :- marketing@rishabh.co.in
International :- exp.marketing@rishabh.co.in
www.rishabh.co.in

Analog Outputs:	0, 2 or 4 programmable outputs: - 20...0...+20 mA, R_{load}: 0..750 Ω Accuracy: 0.2%, Response Time: 3sec. (Note- For admissible overflow of 20% on analog output R load = 0..600 Ω)
Relay Outputs:	0, 2 or 4 relays, voltageless NO contacts load capacity 250 V~/ 0.5 A~
Serial Interface:	RS-485: address 1...247; mode: 8N2, 8E1, 8O1, 8N1; baud rate: 4.8, 9.6, 19.2, 38.4 kbit/s, USB: 1.1 / 2.0, address 1; mode 8N2; baud rate 9.6 kbit/s,
Transmission Protocol:	Modbus RTU Response time: 500 ms
Energy Pulse Output:	output of OC type, passive acc. to EN 62053-31
Pulse Constant of OC Type Output:	5000 -20000 imp./kWh, independently on settings ratios Ku, Ki
Ratio of the Voltage Transformer Ku:	0.1..... 4000.0
Ratio of the Current Transformer Ki:	1...10000
Protection Degree:	
- for the housing	IP 40
- from terminals	IP 20
Weight:	0.45 kg
Dimensions:	122.5 x 66.0 x 106.5mm
Mounting position:	Rail mounting/wall mounting
Reference and Rated Operating Conditions:	
Supply voltage	85...253 V a.c. 40...400 Hz; 90...320 V d.c. or 20...40 V a.c. 40...400 Hz; 20...60 V d.c.

RISHABH INSTRUMENTS PVT.LTD.
F-31, MIDC, Satpur, Nashik-422 007,India.
Tel.: +91 253 2202160, 2202202 Fax : +91 253 2351064
E-mail : India :- marketing@rishabh.co.in
International :- exp.marketing@rishabh.co.in
www.rishabh.co.in
Subject to change without Notice

Input Signal :	
Voltage	0...0.05...1.2 Rated Value(Un)
Current	0...0.005...1.2 Rated value (In)
Frequency	47...63 Hz
Power factors (Pf)	-1...0...1(0 Lag...1...Lead 0)
	(0...0.1...1.2In and 0...0.1...1.2Un) sinusoidal(THD≤8%)
Tangens(φ)	-1.2...0...1.2 (0...0.1...1.2In and 0...0.1...1.2Un) sinusoidal (THD ≤ 8%)
Analog outputs	-24...-20...0...+20...24 mA
Ambient temperature	-10...23...+55°C
Storage temperature	-30...+70 °C
Relative humidity	25...95% (inadmissible condensation)
Admissible peak factor:	
- current	2
- voltage	2
External magnetic field	0..40...400 A/m
Short duration overload 5 sec.:	
- voltage inputs	2Un (max.1000 V)
- current inputs	10 In
Work position	any
Preheating time	5 min.

Additional errors:

In percentage of the basic error:	
From frequency of input signals	< 50%
From ambient temperature changes	< 50%/10°C
For THD > 8%	< 100%

Standards Fulfilled by the Meter

Electromagnetic Compatibility:

Noise immunity	acc. to EN 61000-6-2
Noise emission	acc. to EN 61000-6-4

RISHABH INSTRUMENTS PVT.LTD.
F-31, MIDC, Satpur, Nashik-422 007,India.
Tel.: +91 253 2202160, 2202202 Fax : +91 253 2351064
E-mail : India :- marketing@rishabh.co.in
International :- exp.marketing@rishabh.co.in
www.rishabh.co.in

Subject to change without Notice

Safety Requirements:

Isolation between circuits	1min. (EN 61010-1) 3110V DC, All terminals versus outer surface 3110V DC, Input versus all other circuit 3110V DC, Auxiliary supply versus outer surface and all other circuit. (Note - No isolation between the analog outputs)
Installation category	III
Pollution level	2
Maximal phase-to-hearth voltage	
- for supply and measurement circuit	300 V
- for other circuits	50 V
Altitude above sea level	< 2000 m,

LED Indication

Table2

LED	State	Indication
ON	Green continuous	Aux Supply healthy condition and calibration ok
Rx	Pulsing	Data reception through RS485
Tx	Pulsing	Data transmission through Rs485
AL1....AL4	Continuous ON	Alarm ON

Terminal Details

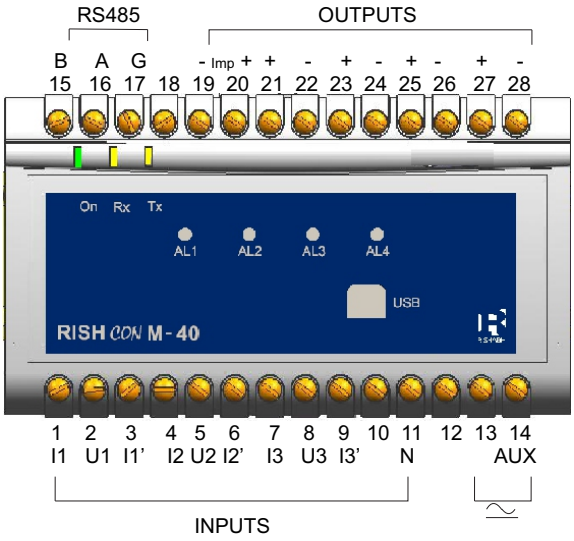

Fig 2.Terminal Details

RISHABH INSTRUMENTS PVT.LTD.
F-31, MIDC, Satpur, Nashik-422 007,India.
Tel.: +91 253 2202160, 2202202 Fax : +91 253 2351064
E-mail : India :- marketing@rishabh.co.in
International :- exp.marketing@rishabh.co.in
www.rishabh.co.in
Subject to change without Notice

External connections :

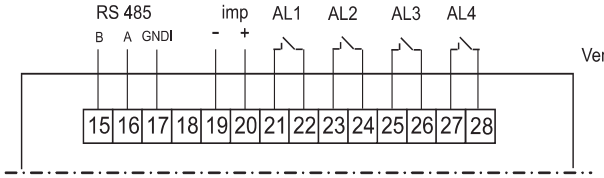

Version without analog outputs
4 relays

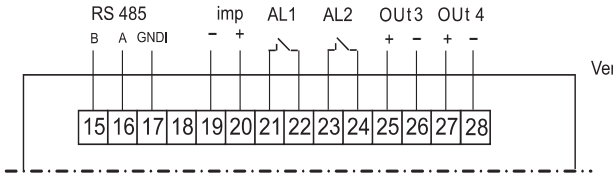

Version witht 2 analog outputs
2 relays

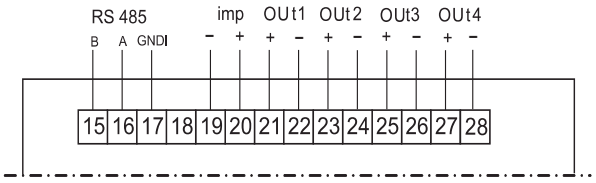

Version witht 4 analog outputs
without relays

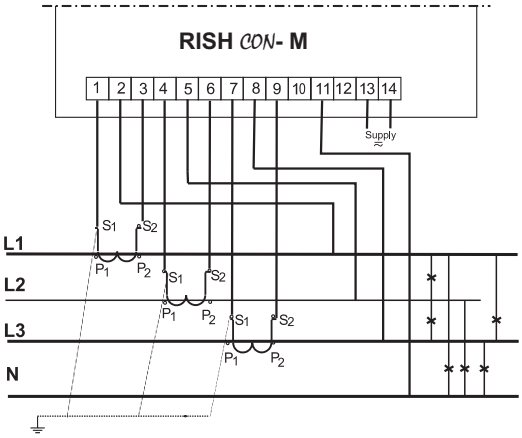

Measurement with the use of current transformers in a four-wire network.

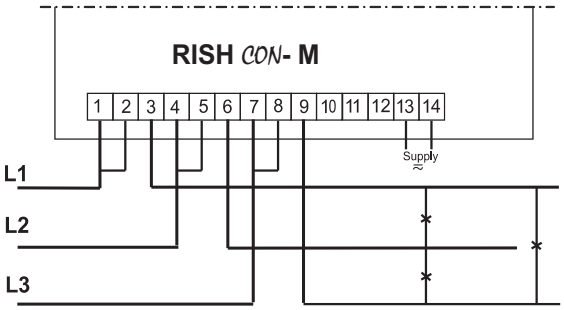

Direct measurement in a three-wire network.

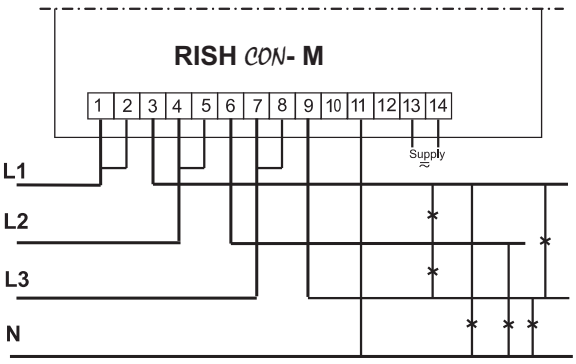

Direct measurement in a four-wire network.

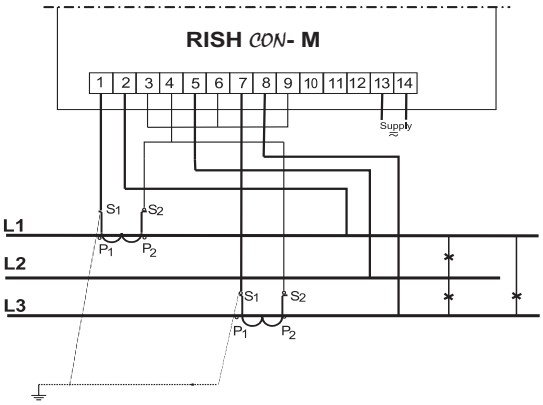

Semidirect measurement in a three-wire network.

RISHABH INSTRUMENTS PVT.LTD.
F-31, MIDC, Satpur, Nashik-422 007,India.
Tel.: +91 253 2202160, 2202202 Fax : +91 253 2351064
E-mail : India :- marketing@rishabh.co.in
International :- exp.marketing@rishabh.co.in
www.rishabh.co.in

Subject to change without Notice

Electrical Networks :

Indirect measurement with the use of 3 current transformers and 2 or 3 voltage transformers in a four-wire network.

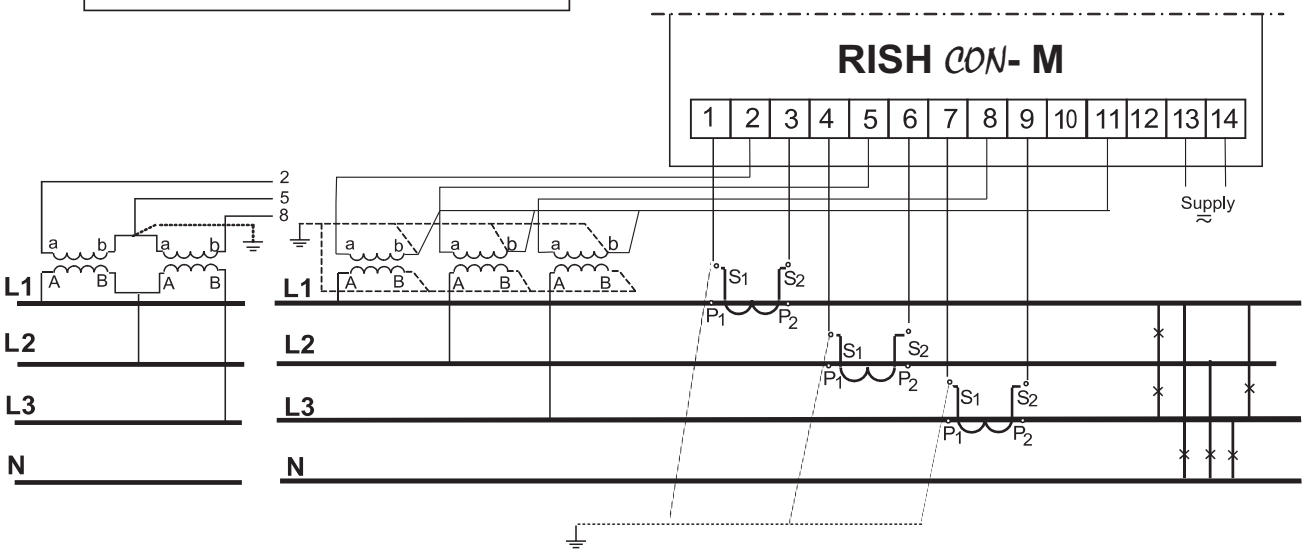

Indirect measurement with the use of 2 current transformers and 2 or 3 voltage transformers in a three-wire network.

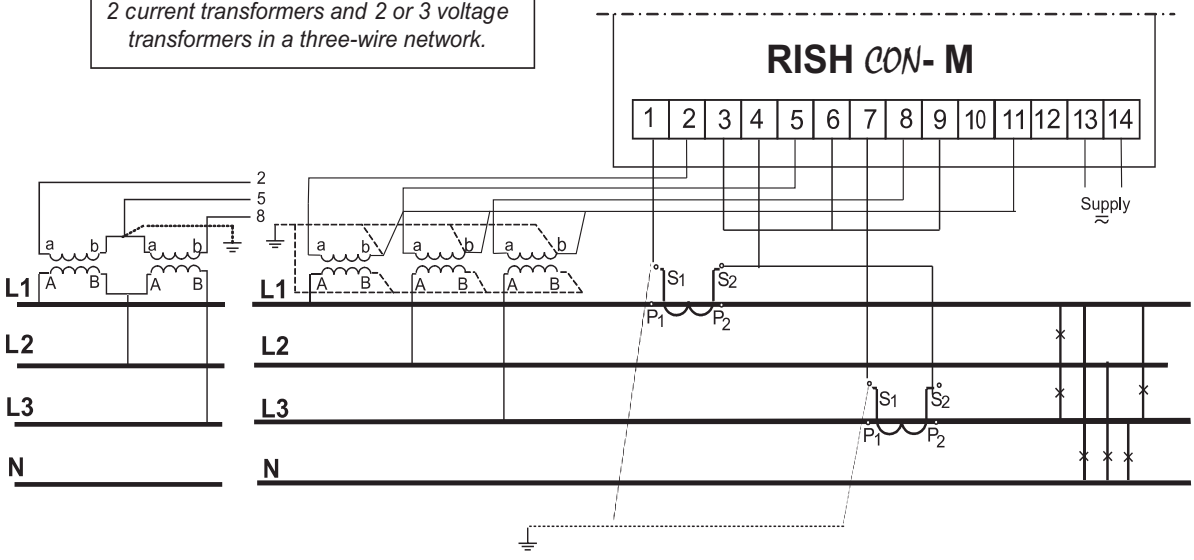

Fig 3. Electrical connections

RISHABH INSTRUMENTS PVT.LTD.
F-31, MIDC, Satpur, Nashik-422 007,India.
Tel.: +91 253 2202160, 2202202 Fax : +91 253 2351064
E-mail : India :- marketing@rishabh.co.in
International :- exp.marketing@rishabh.co.in
www.rishabh.co.in

Subject to change without Notice

Programming

Programming of transducer

The eCon software is destined for the configuration of transducer. one must connect the transducer to a pc computer through the rs485 converter ,if the communication will be performed using Rs485 interface or directly through the USB .

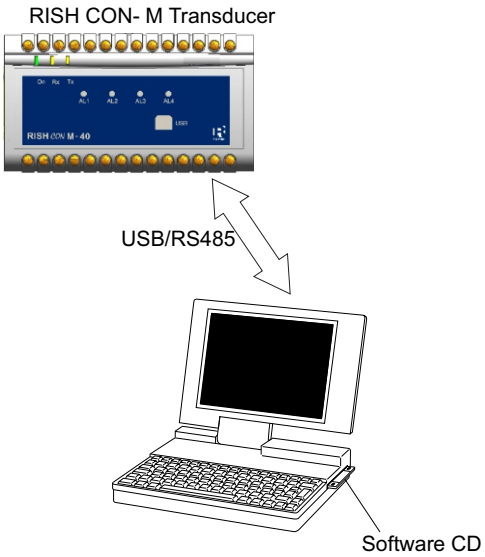

Fig 4. Configuration of the transducer

Dimensions

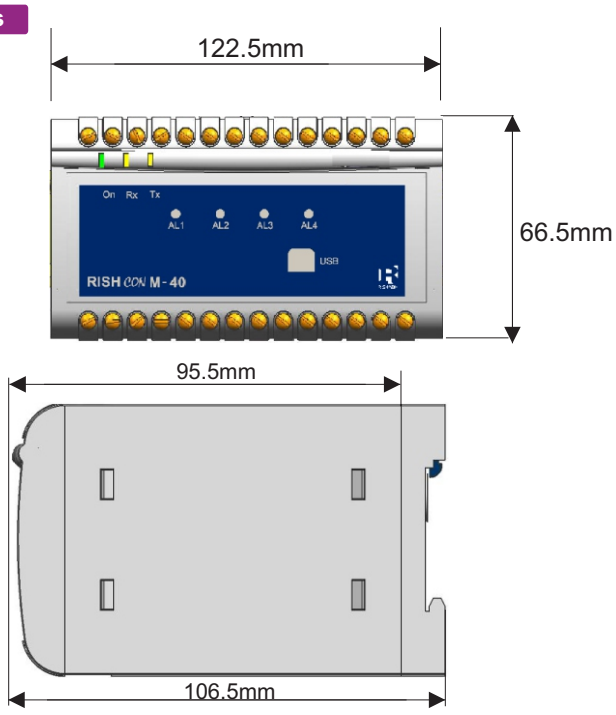

Fig 5. (All dimensions are in mm.)

Ordering Information

RISH CON-M	X	X	X	X	X
Current input In:					
1 A (X/1)	1				
5 A (X/5)	2				
Voltage input (phase/Phase-to-phase) Un:					
3 phase 57.7/100 V		1			
3 phase 230/400 V		2			
Supply voltage:					
85..253 V a.c., 90..320 V d.c.			1		
20..40 V a.c., 20..60 V d.c.			2		
Output type:					
without analog outputs, 4 relays				1	
2 analog outputs, 2 relays				2	
4 analog outputs, without relays				3	
Load Resistance (R_L):					
250 Ohm					1
750 Ohm					2

Model Types

Model Code	Model Type
RISH CON M - 40	4 Analog Output type
Model Code M - 04	4 Relay Output type
Model Code M - 22	2 Analog 2 Relay Output type

RISHABH INSTRUMENTS PVT.LTD.
F-31, MIDC, Satpur, Nashik-422 007,India.
Tel.: +91 253 2202160, 2202202 Fax : +91 253 2351064
E-mail : India :- marketing@rishabh.co.in
International :- exp.marketing@rishabh.co.in
www.rishabh.co.in

Subject to change without Notice